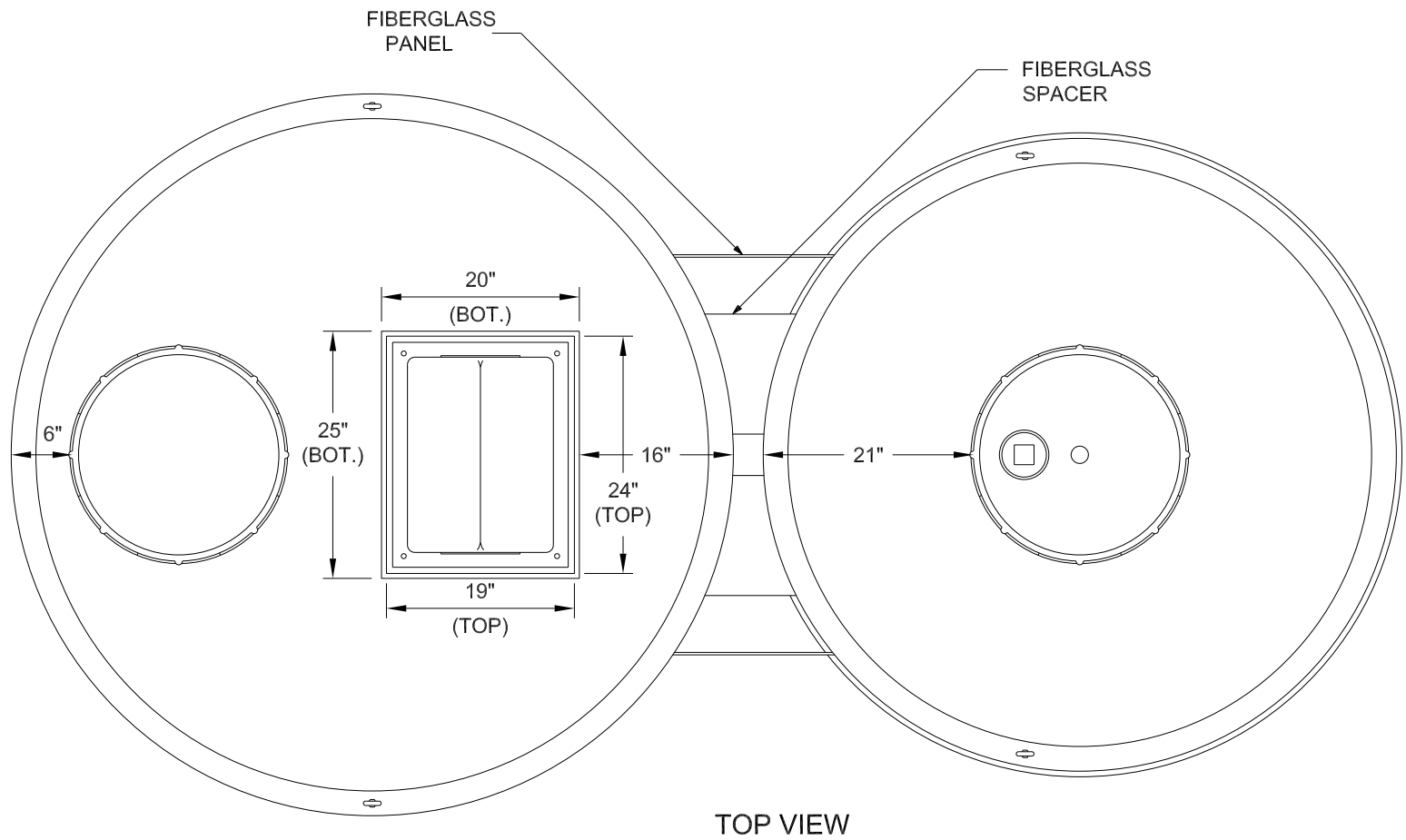

TOP VIEW

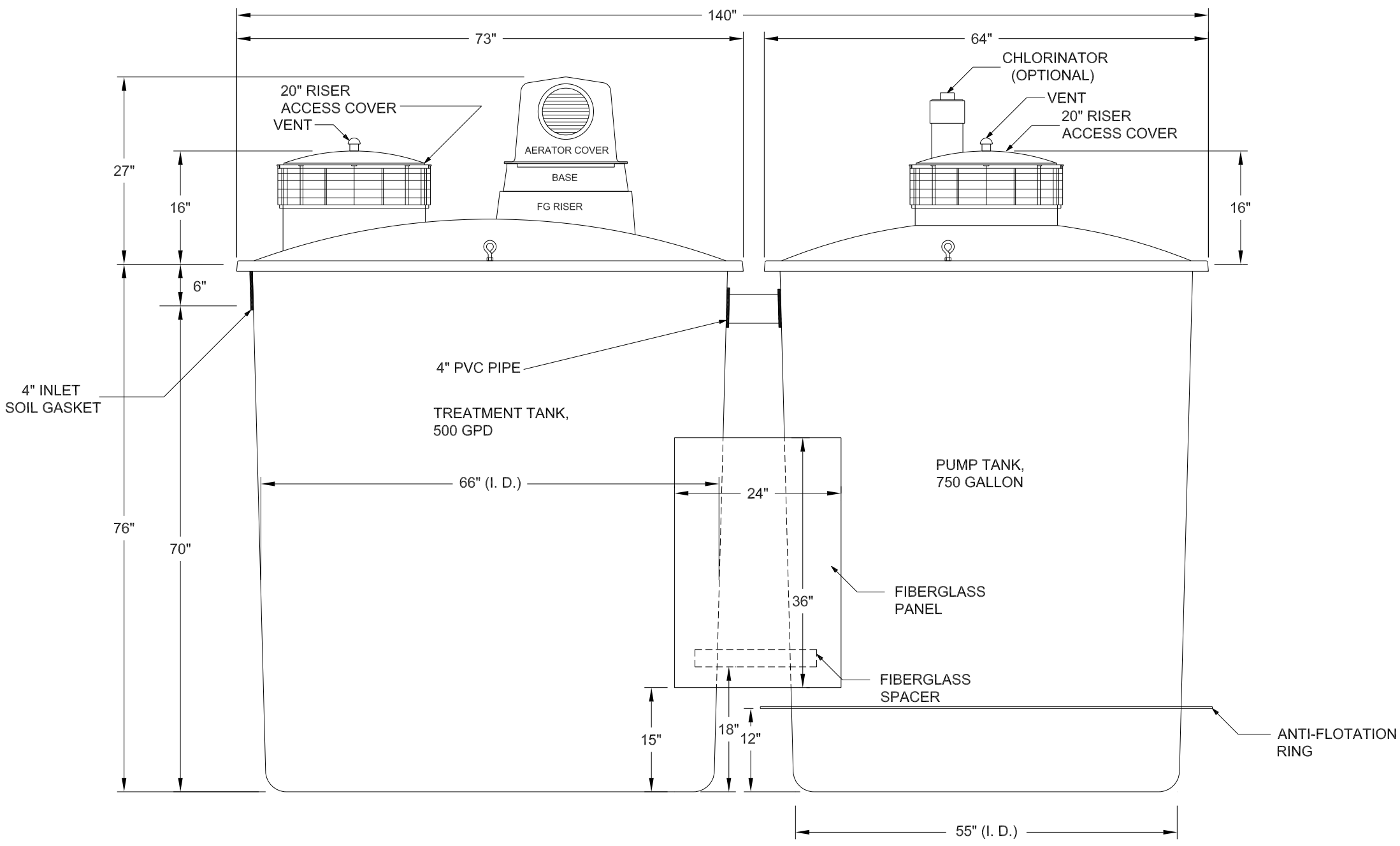

SIDE VIEW

ALL DIMENSIONS IN INCHES

DESCRIPTION: MODEL AS500 +75 DUO PUMP WITH EZ TOP				
Treatment Capacity: 500 GPD	Flow Line Volume: 1000 GAL.			
BOD Loading: 1.25 #/DAY				
DWG REF: D-TA-017	REV: 0	DATE: 11/10/04	SCALE: FULL	ENG: RD

ECOLOGICAL TANKS, INC
2247 HWY 151 NORTH
DOWNSVILLE, LA 71234
318-644-0397 OFFICE
318-644-7257 FAX

NO PART OF THIS DRAWING MAY BE REPRODUCED, STORED IN ANY RETRIEVAL SYSTEM, OR TRANSMITTED IN ANY FORM OR BY ANY MEANS, ELECTRONIC, MECHANICAL, PHOTOCOPYING, RECORDING OR OTHERWISE WITHOUT THE PRIOR WRITTEN PERMISSION OF ECOLOGICAL TANKS, INC.